NOTICE: When inspecting or repairing the SRS, perform the operation in accordance with the following precautionary instructions and the procedure and precautions in the Repair Manual for the applicable model year.

- Malfunction symptoms of the SRS are difficult to confirm, so the DTCs become the most important source of information when troubleshooting. When troubleshooting the SRS, always inspect the DTCs before disconnecting the battery.
- **Work must be started after 90 seconds from when the ignition switch is turned to the ”LOCK” position and the negative (–) terminal cable is disconnected from the battery.**
  (The SRS is equipped with a back–up power source so that if work is started within 90 seconds from disconnecting the negative (–) terminal cable of the battery, the SRS may be deployed.)
- When the negative (–) terminal cable is disconnected from the battery, the memory of the clock and audio system will be canceled. So before starting work, make a record of the contents memorized in the audio memory system. When work is finished, reset the audio systems as they were before and adjust the clock. This vehicle has power tilt and power telescopic steering, power seat and power outside rear view mirror which are all equipped with memory function. However, it is not possible to make a record of the memory contents. So when the work is finished, it will be necessary to explain this fact tot the customer, and ask the customer to adjust the features and reset the memory. To avoid erasing the memory in each memory system, never use a back–up power supply from outside the vehicle.
- Before repairs, remove the airbag sensor if shocks are likely to be applied to the sensor during repairs.
- Do not expose the steering wheel pad, front passenger airbag assembly, side airbag assembly, seat belt pretensioner, airbag sensor assembly, front airbag sensor assembly or side airbag sensor assembly directly to hot air or flames.
- Even in cases of a minor collision where the SRS does not deploy, the steering wheel pad, front passenger airbag assembly, side airbag assembly, seat belt pretensioner, airbag sensor assembly, front airbag sensor assembly and side airbag sensor assembly should be inspected.
- Never use SRS parts from another vehicle. When replacing parts, replace them with new parts.
- Never disassemble and repair the steering wheel pad, front passenger airbag assembly, side airbag assembly, seat belt pretensioner, airbag sensor assembly, front airbag sensor assembly or side airbag sensor assembly in order to reuse it.
- If the steering wheel pad, front passenger airbag assembly, side airbag assembly, seat belt pretensioner, airbag sensor assembly, front airbag sensor assembly or side airbag sensor assembly has been dropped, or if there are cracks, dents or other defects in the case, bracket or connector, replace them with new ones.
- Use a volt/ohmmeter with high impedance (10 kΩ/V minimum) for troubleshooting the system’s electrical circuits.
- Information labels are attached to the periphery of the SRS components. Follow the instructions on the notices.
- After work on the SRS is completed, perform the SRS warning light check.
- If the vehicle is equipped with a mobile communication system, refer to the precaution in the IN section of the Repair Manual.

cardiagn.com

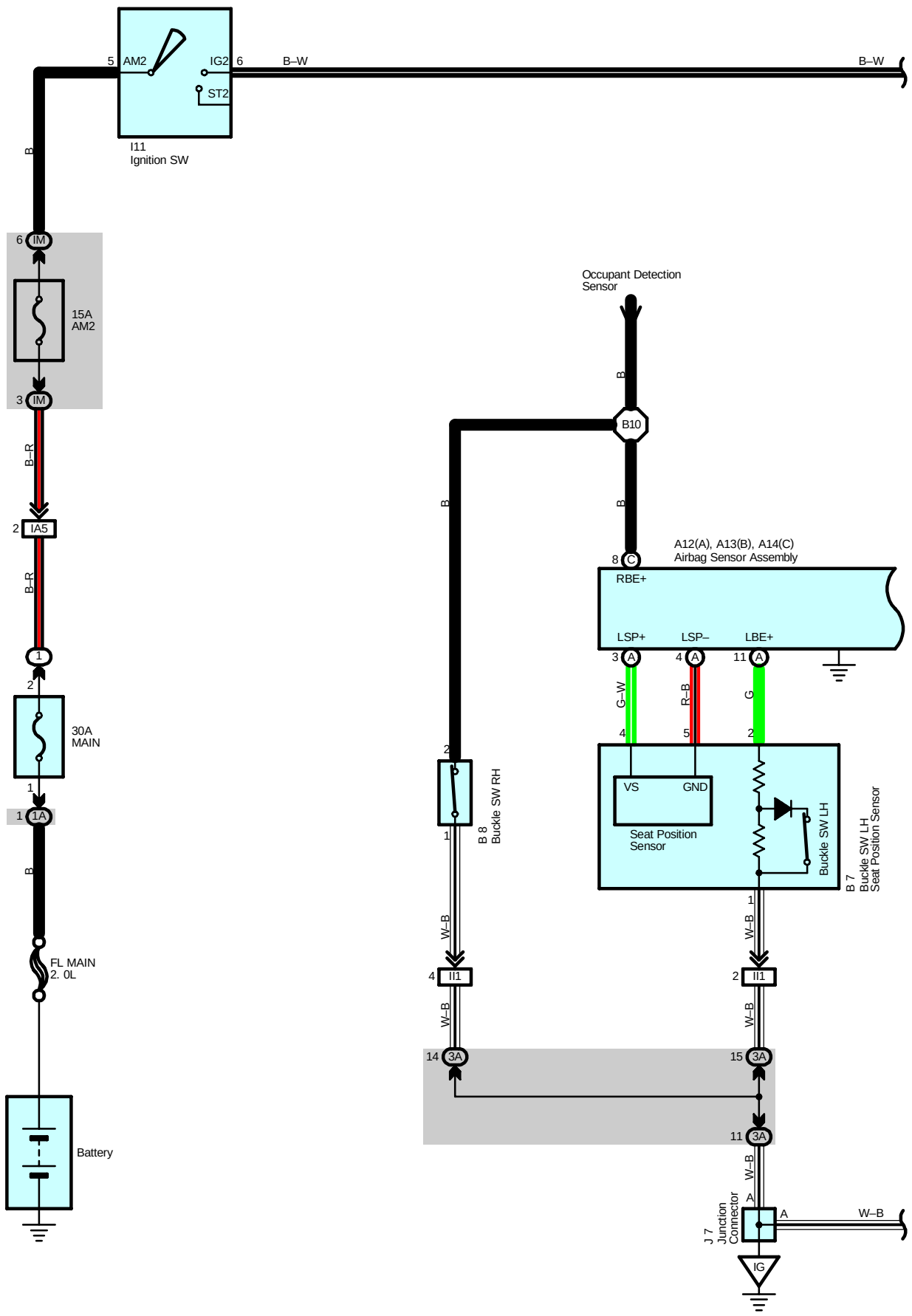

cardiagn.com

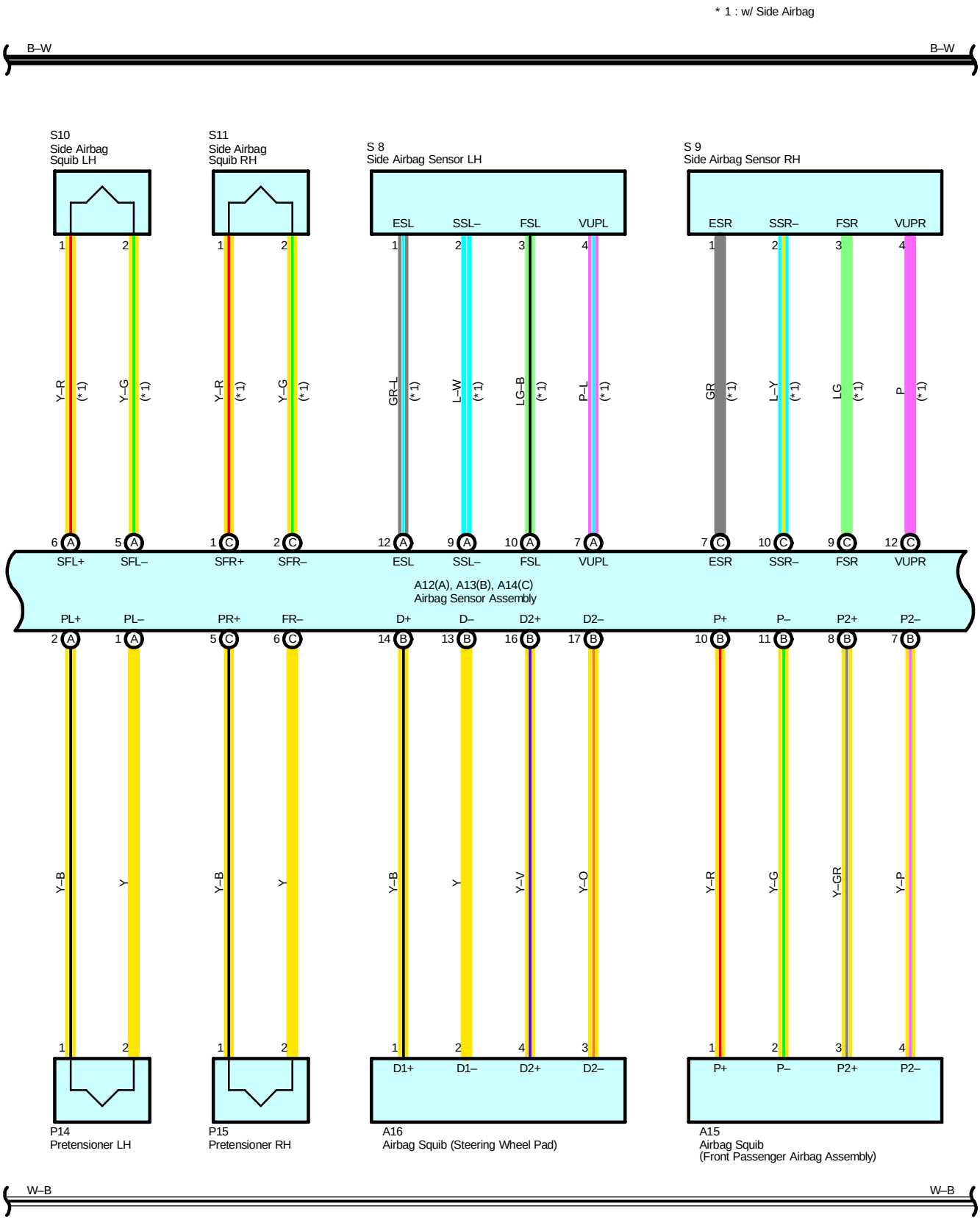

cardiagn.com

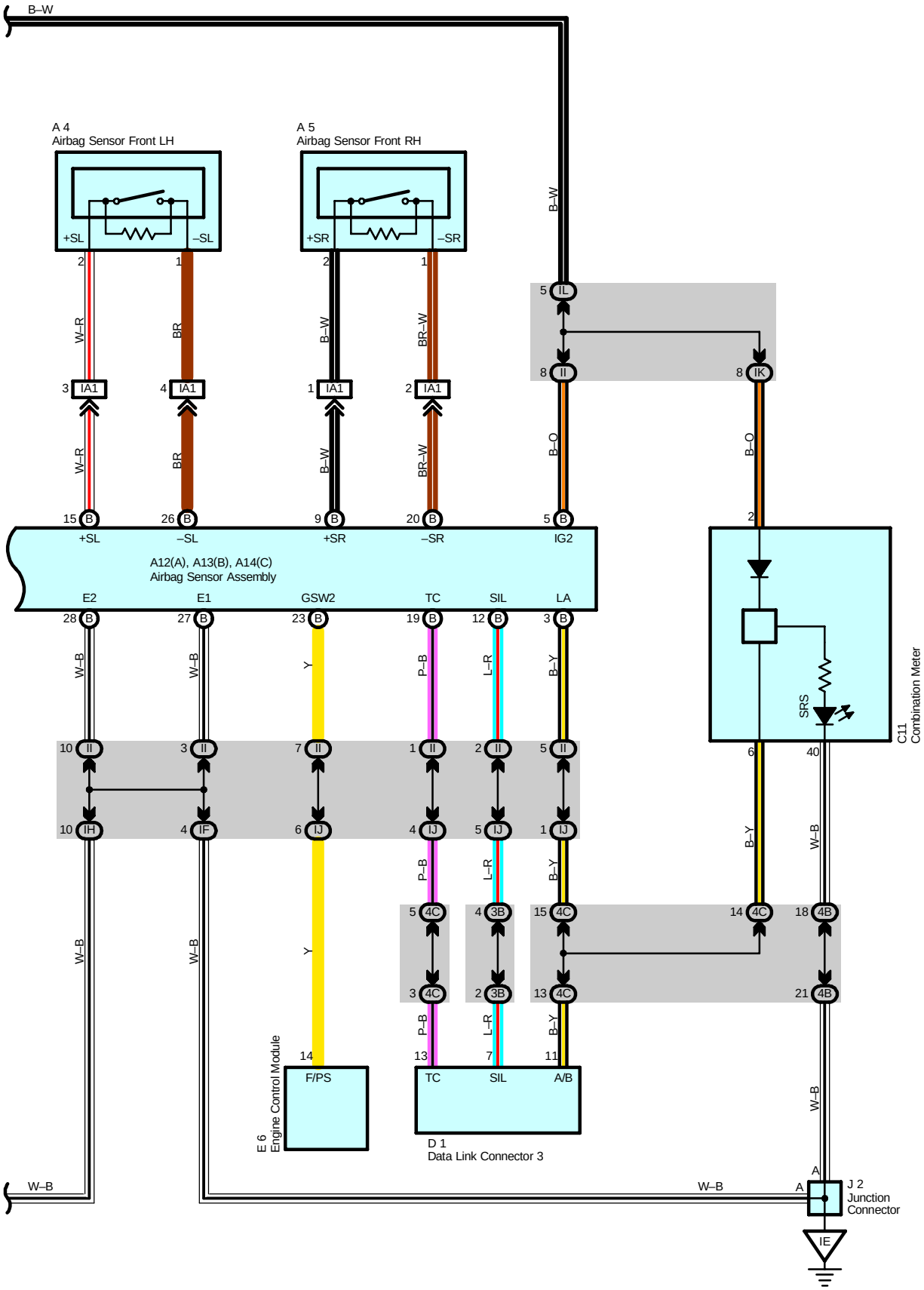

cardiagn.com

System Outline

The SRS is a driver and front passenger protection device which has a supplemental role to the seat belts.
When the ignition SW is turned to ON, current from the MAIN fuse flows to AM2 fuse to ignition SW (IG2) to TERMINAL (B) 5 of the airbag sensor assembly.
If an accident occurs while driving, when the frontal impact exceeds a set level, the current from the TERMINAL (B) 5 of the airbag sensor assembly flows to TERMINALS (B) 14, (B) 16, (B) 10, (B) 8, (A) 2 and (C) 5 of the airbag sensor assembly to airbag squibs and the pretensioners to TERMINALS (B) 13, (B) 17, (B) 11, (B) 7, (A) 1 and (C) 6 of the airbag sensor assembly to TERMINAL (B) 20, (B) 27 or BODY GROUND to GROUND, so that the current flows to the front airbag squibs and the pretensioners, and causes them to operate.
When the side impact also exceeds a set level, the current from the TERMINAL (B) 5 of the airbag sensor assembly flows to TERMINALS (A) 6 and (C) 1 of the airbag sensor assembly to the side airbag squibs to TERMINALS (A) 5 and (C) 2 of the airbag sensor assembly to TERMINAL (B) 20, (B) 27 or BODY GROUND to GROUND, causing side airbag squibs to operate.
The airbag stored inside the steering wheel pad is instantaneously expanded to soften the shock to the driver.
The airbag stored inside the passenger's instrument panel is instantaneously expanded to soften the shock to the front passenger.
Side airbags are instantaneously expanded to soften the shock of side to the driver and front passenger.
The pretensioners make sure of the seat belt restrainability.

: Parts Location

Code		See Page	Code	See Page	Code	See Page
A4		34 (2ZZ–GE)	A16	38	J7	39
		36 (1ZZ–FE)	B7	40	P14	41
A5		34 (2ZZ–GE)	B8	40	P15	41
		36 (1ZZ–FE)	C11	38	S8	41
A12	A	38	D1	38	S9	41
A13	B	38	E6	38	S10	41
A14	C	38	I11	39	S11	41
A15		38	J2	39		

: Relay Blocks

Code	See Page	Relay Blocks (Relay Block Location)
1	23	Engine Room R/B (Engine Compartment Left)

: Junction Block and Wire Harness Connector

Code	See Page	Junction Block and Wire Harness (Connector Location)
IF	25	Instrument Panel Wire and Instrument Panel J/B (Lower Finish Panel)
IH		
II		
IJ		
IK	24	
IL		
IM		
1A	23	Engine Wire and Engine Room J/B (Engine Compartment Left)
3A	29	Instrument Panel Wire and RH J/B (Right Side of the Instrument Panel Reinforcement)
3B		
4B	32	Instrument Panel Wire and Center J/B (Behind the Combination Meter)
4C		

: Connector Joining Wire Harness and Wire Harness

Code	See Page	Joining Wire Harness and Wire Harness (Connector Location)
IA1	46	Engine Room Main Wire and Instrument Panel Wire (Instrument Panel Reinforcement LH)
IA5		
II1	48	Instrument Panel Wire and Instrument Panel No.3 Wire (Under the Instrument Panel Center)

cardiagn.com

: **Ground Points**

Code	See Page	Ground Points Location
IE	46	Behind Combination Meter
IG	46	Right Kick Panel

: **Splice Points**

Code	See Page	Wire Harness with Splice Points	Code	See Page	Wire Harness with Splice Points
B10	50	Instrument Panel No.3 Wire			

cardiagn.com